Generated from: https://www.id2market.eu/Tue-02-May-2023-23400.html
Generated on: 2026-03-11 01:07:10 | Copyright © 2026 ID2 SOLAR MARKET. All rights reserved.

Communication base station inverter and Internet base station inverter

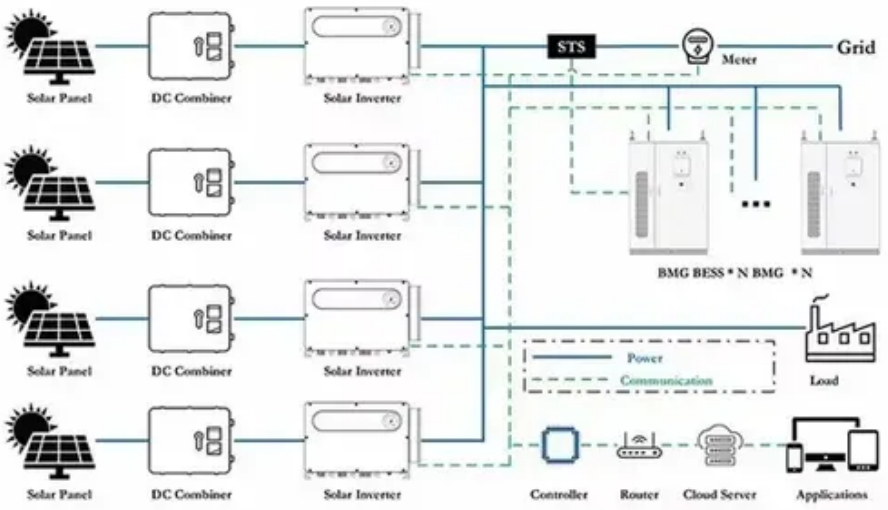

Overview

In an era where seamless communication is non-negotiable, outdoor inverters for communication base stations play a pivotal role in maintaining uninterrupted connectivity. This article explores how these specialized inverters address power challenges in remote telecom. Hybrid inverters emerge as a vital component in these setups, intelligently managing power flow from various sources to ensure continuous operation and energy independence. The approach is based on integration of a compr.

Communication base station inverter and Internet base station invert

Communication base station inverter area requirements

In order to better weave the underlying network of energy digitization and intelligent development, choose the most appropriate communication method according to local conditions.

The Importance of Pure Sine Wave Inverters in Base Stations, Data

The DOER DGPN DC to AC pure sine wave inverter is designed and produced specifically for the practical needs of power systems and communication industries, considering the ...

Communication Base Station Outdoor Inverters: Powering Reliable

In an era where seamless communication is non-negotiable, outdoor inverters for communication base stations play a pivotal role in maintaining uninterrupted connectivity.

Communication Base Station Inverter Application

How to ensure the compatibility between the inverter and other systems of the communication base station? The key to ensuring compatibility is to consider when selecting an ...

Hybrid Inverter Selection for BTS Shelters: Specs That Matter

Discover essential specifications for selecting hybrid inverters for BTS shelters and telecom towers. Learn how to ensure reliable, efficient, and scalable power solutions for remote base ...

Smart Power of Communication Base Station

Installing a smart switch module at an unattended basic station, the smart switch module can collect data in real time and use the data to display on a visual management platform to help administrators ...

Communication base station inverter technology

Tronyan is at the forefront of communication technology, offering advanced communication base stations designed for reliability and performance. Our base stations are engineered to ensure

Communication base station inverter

connected to the grid for power

About Communication base station inverter connected to the grid for power generation At SolarTech Innovations, we specialize in comprehensive photovoltaic solutions including hybrid electric systems, ...

Products and specifications of communication base station inverters

Conclusion: As 5G networks expand, hybrid inverters will play a pivotal role in powering next-gen base stations--providing stable, cost-effective, and green energy solutions

THE FUTURE OF HYBRID INVERTERS IN 5G COMMUNICATION ...

Base station operators deploy a large number of distributed photovoltaics to solve the problems of high energy consumption and high electricity costs of 5G base stations.

Contact Us

For catalog requests, pricing, or partnerships, please visit:
https://www.id2market.eu
Phone: +34 910 56 87 45
Email: info@id2market.eu

Scan the QR code to access our WhatsApp.